48B Metal hoods/housings

Degree of protection: IP65

Hoods, side entry

Thread	Designation	Order No.
M32	H48B-SE-2B-M32	111 048 515 1004
M40	H48B-SE-2B-M40	111 048 515 1005
M50	H48B-SE-2B-M50	111 048 515 1006
PG29	H48B-SE-2B-PG29	111 048 515 1012
PG36	H48B-SE-2B-PG36	111 048 515 1013
PG42	H48B-SE-2B-PG42	111 048 515 1014

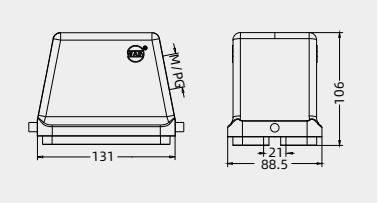

Hoods, top entry

Thread	Designation	Order No.
M32	H48B-TE-2B-M32	111 048 415 1004
M40	H48B-TE-2B-M40	111 048 415 1005
M50	H48B-TE-2B-M50	111 048 415 1006
PG29	H48B-TE-2B-PG29	111 048 415 1012
PG36	H48B-TE-2B-PG36	111 048 415 1013
PG42	H48B-TE-2B-PG42	111 048 415 1014

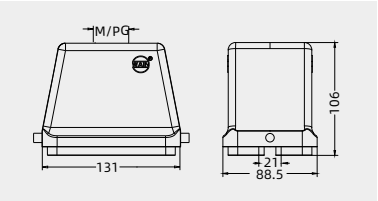

Bulkhead mounted housings

Thread	Designation	Order No.
---	H48B-BK-1L/S	111 048 325 1001
	with plastic cover	
---	H48B-BK-1L/S-CV	111 048 365 1001
	with metal cover	
---	H48B-BK-1L/S-MCV	111 048 365 1101

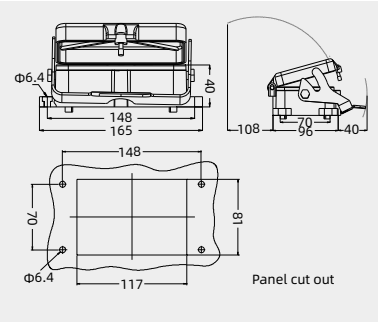

Surface mounted housings
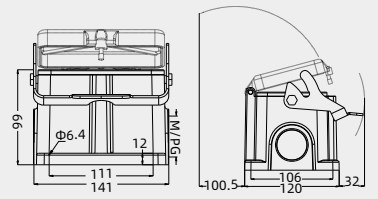
Thread	Designation	Order No.
M32	H48B-SF-1L/S-M32	111 048 225 1004
2M32	H48B-SF-1L/S-2M32	111 048 225 1024
M40	H48B-SF-1L/S-M40	111 048 225 1005
2M40	H48B-SF-1L/S-2M40	111 048 225 1025
PG29	H48B-SF-1L/S-PG29	111 048 225 1012
2PG29	H48B-SF-1L/S-2PG29	111 048 225 1032
PG36	H48B-SF-1L/S-PG36	111 048 225 1013
2PG36	H48B-SF-1L/S-2PG36	111 048 225 1033
	with plastic cover	
M32	H48B-SF-1L/S-CV-M32	111 048 265 1004
2M32	H48B-SF-1L/S-CV-2M32	111 048 265 1024
M40	H48B-SF-1L/S-CV-M40	111 048 265 1005
2M40	H48B-SF-1L/S-CV-2M40	111 048 265 1025
PG29	H48B-SF-1L/S-CV-PG29	111 048 265 1012
2PG29	H48B-SF-1L/S-CV-2PG29	111 048 265 1032
PG36	H48B-SF-1L/S-CV-PG36	111 048 265 1013
2PG36	H48B-SF-1L/S-CV-2PG36	111 048 265 1033
	with metal cover	
M32	H48B-SF-1L/S-MCV-M32	111 048 265 1104
2M32	H48B-SF-1L/S-MCV-2M32	111 048 265 1124
M40	H48B-SF-1L/S-MCV-M40	111 048 265 1105
2M40	H48B-SF-1L/S-MCV-2M40	111 048 265 1125
PG29	H48B-SF-1L/S-MCV-PG29	111 048 265 1112
2PG29	H48B-SF-1L/S-MCV-2PG29	111 048 265 1132
PG36	H48B-SF-1L/S-MCV-PG36	111 048 265 1113
2PG36	H48B-SF-1L/S-MCV-2PG36	111 048 265 1133